卷册检索号 SEARCH NO. OF THE VOLUME
MLHVDC-LCS-ECI-DD-CS-0809 30-B003701S-T0809

第 1 页 共 1 页
PAGE 1 OF 1

图纸文件目录（首页）

CATALOG OF DRAWING DOCUMENTS (HEAD PAGE)

拉合尔±660kV换流站 工程 施工图 阶段
±660kV Lahore Converter Station PROJECT Detail Design DESIGN STAGE

结构 专业 第 08 卷 第 09 册
Structure SPECIALITY VOLUME BOOK

卷册名称 极2阀厅巡视走道布置图
Volume name Patrol walkway layout of Pole 2 valve hall

批 准 APPROVED BY	2018.06.20	
审 核 REVIEWED BY		
设计/勘测 DESIGNED BY/ SURVEYED BY	王新 2018.06.18	
图 纸 4 张 DRAWING NOS.	打印件 本 PRINTED COPIES NOS.	

序号 No.	图 号 DRAWING NO.	文 件 名 称 DOCUMENT TITLE	版本 EDITION	张 NOS.	本 NOS.	备注 REMARKS
01	30-B003701S-T0809-001	极2阀厅巡视走道布置图 Patrol walkway layout of Pole 2 valve hall	A	1		
02	30-B003701S-T0809-002	极2阀厅侧墙和屋内巡视走道详图(1) The detail drawing (1) of patrol walkway in Pole 2 valve hall	A	1		
03	30-B003701S-T0809-003	极2阀厅侧墙和屋内巡视走道详图(2) The detail drawing (2) of patrol walkway in Pole 2 valve hall	A	1		
04	30-B003701S-T0809-004	极2阀厅屋面巡视走道详图 The detail drawing of patrol walkway on the roof of Pole 2 valve hall	A	1		

注:

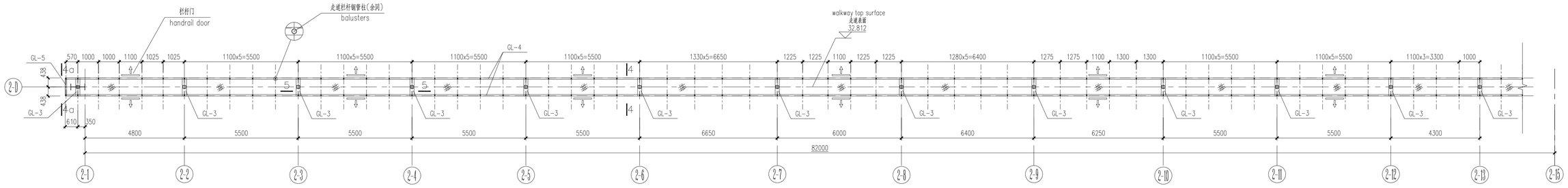

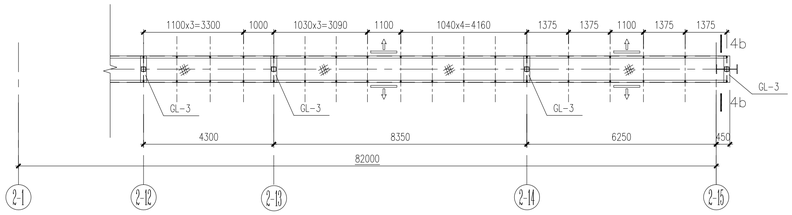

极2阀厅屋面巡视走道布置图(32.812m)

Patrol walkway layout on the roof of Pole 2 valve hall(32.812m)

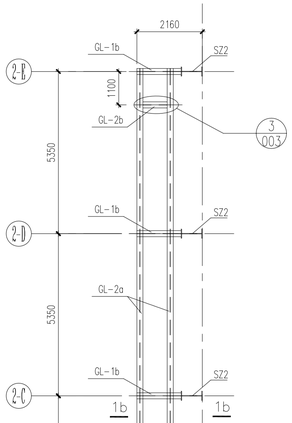

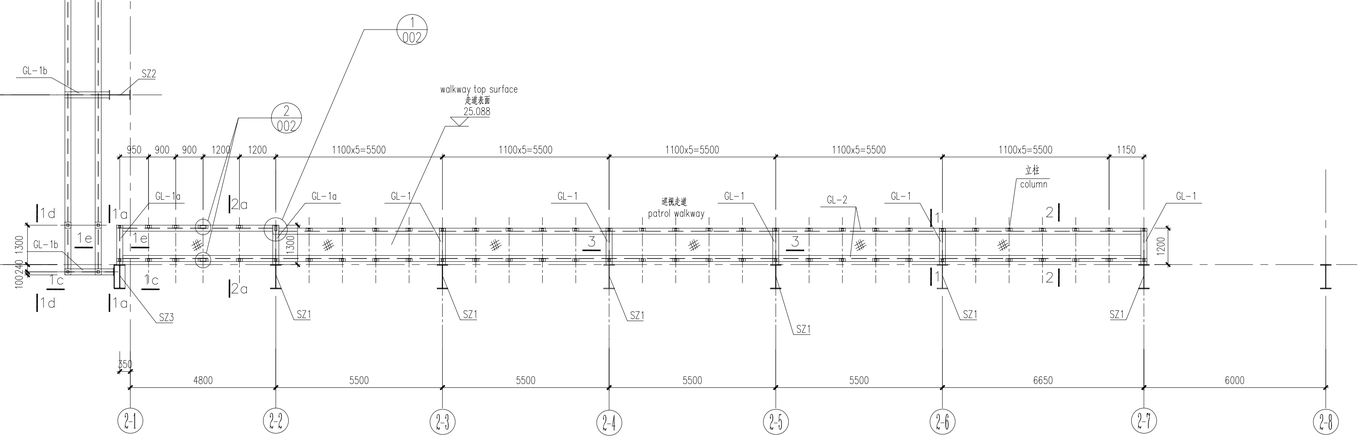

极2阀厅侧墙和屋内巡视走道布置图(25.088)

Patrol walkway layout in Pole 2 valve hall(25.088)

Material list of steel 钢材材料表

序号 NO.	构件名称 Name	规 格 Type	设计长度(mm) Design Length(mm)	数 量 Quantity
1	GL-1	HW200X200X8X12	1200	5
2	GL-1a	HW200X200X8X12	1300	2
3	GL-1b	HW200X200X8X12	1460	5
4	GL-2	H200X200X6X8	33600	2
5	GL-2a	H200X200X6X8	21390	2
6	GL-2b	H200X200X6X8	800	1
7	GL-3	HW200X200X8X12	876	15
8	GL-4	□20a	83410	2
9	GL-5	□20a	730	1
10	立柱 column	□80x4		68

说明:

1. 屋内巡视走道钢结构同阀厅主体钢结构防腐,屋面巡视走道全部构件均采用热镀锌防腐,现场焊接部位补漆要求见40-BA08491S-T0402-001。
2. 剖面及节点详图见本册002,003,004图。
3. 焊接时应采取措施消除温度应力的影响。
4. 走道钢丝网、花纹钢板、栏杆采用Q235B钢材,对应焊条E43XX,其它采用Q345B钢材,对应焊条E50XX。
5. H200x200x6x8为高频焊接H型钢,HW200x200x8x12为热轧无缝H型钢。
6. 材料表仅供参考,具体以放样为准。
7. 钢结构设计加工说明见30-B003701S-T0807-001。
8. 本册图中除特殊注明外,M16以上螺栓采用10.9级高强螺栓。M16及以下螺栓采用6.8级普通C级螺栓。

Notes:

1. Anticorrosion of patrol walkway structure in Pole 1 valve hall refers to the anticorrosion of valve hall structure. All the steel members of patrol walkway on the roof should be hot-dip galvanized. Site welding should be painted. Reference to the drawing 40-BA08491S-T0402-001 for the detail notes about anticorrosion.
2. See drawing 002, 003 and 004 in this volume for the detail of section and joint.
3. Measures should be taken to eliminate the effects of temperature stress during welding.
4. Walkway wire mesh, tread plate, railings use Q235B steel, corresponding to electrode E43XX, and others use Q345B steel, corresponding to electrode E50XX.
5. H200x200x6x8 is High-frequency welding H-shaped steel. HW200x200x8x12 is Hot-rolled welded H-shaped steel.
6. Material list is for reference only.
7. Steel structure design and processing instructions see drawing 30-B003701S-T0807-001.
8. Unless otherwise specified, the bolts whose grade beyond M16 use 10.9 grade high-strength bolts and others use 6.8 grade C class bolts.

Reference Drawings

Drwg. No.	Title
30-B003701S-T0801-003	±0.000m structure layout for pole 1 valve hall and firewall
30-B003701S-T0801-002	plan layout of pile cap for pole 1 valve hall and firewall
30-B003701S-T0801-001	General specification of foundations for pole 1 valve hall and firewall

Revisions

	Name	Date	Notes
A	王轩		First issue

巴基斯坦默蒂亚里-拉合尔±660kV直流输电工程

±660kV HVDC Project from Matiari to Lahore in Pakistan

NATIONAL TRANSMISSION & DESPATCH COMPANY (NTDC) LIMITED PAKISTAN

CONTRACTOR 国家电网 STATE GRID 中国电力技术装备有限公司 CHINA ELECTRIC POWER EQUIPMENT & TECHNOLOGY CO.,LTD.

SUBCONTRACTOR East China Electric Power Design Institute Co.,Ltd.

拉合尔±660kV换流站

±660kV Lahore Converter Station

设计阶段 PHASE: 施工图 Detail Design

M L H V D C - L C S - E C I - D D - C S - 0 8 0 9 - 0 0 1 A

	姓名 Name	日期 Date
设计 Designed	王轩	18.06.18
校核 Checked	金晓峰	18.06.19
审核 Reviewed	邓刚	18.06.19
批准 Approved	杨俊	18.06.19

极2阀厅巡视走道布置图

Patrol walkway layout of Pole 1 valve hall

比例 Scale:

图号 DWG NO.: 30-B003701S-T0809-001

版本 REV.: A

594X841

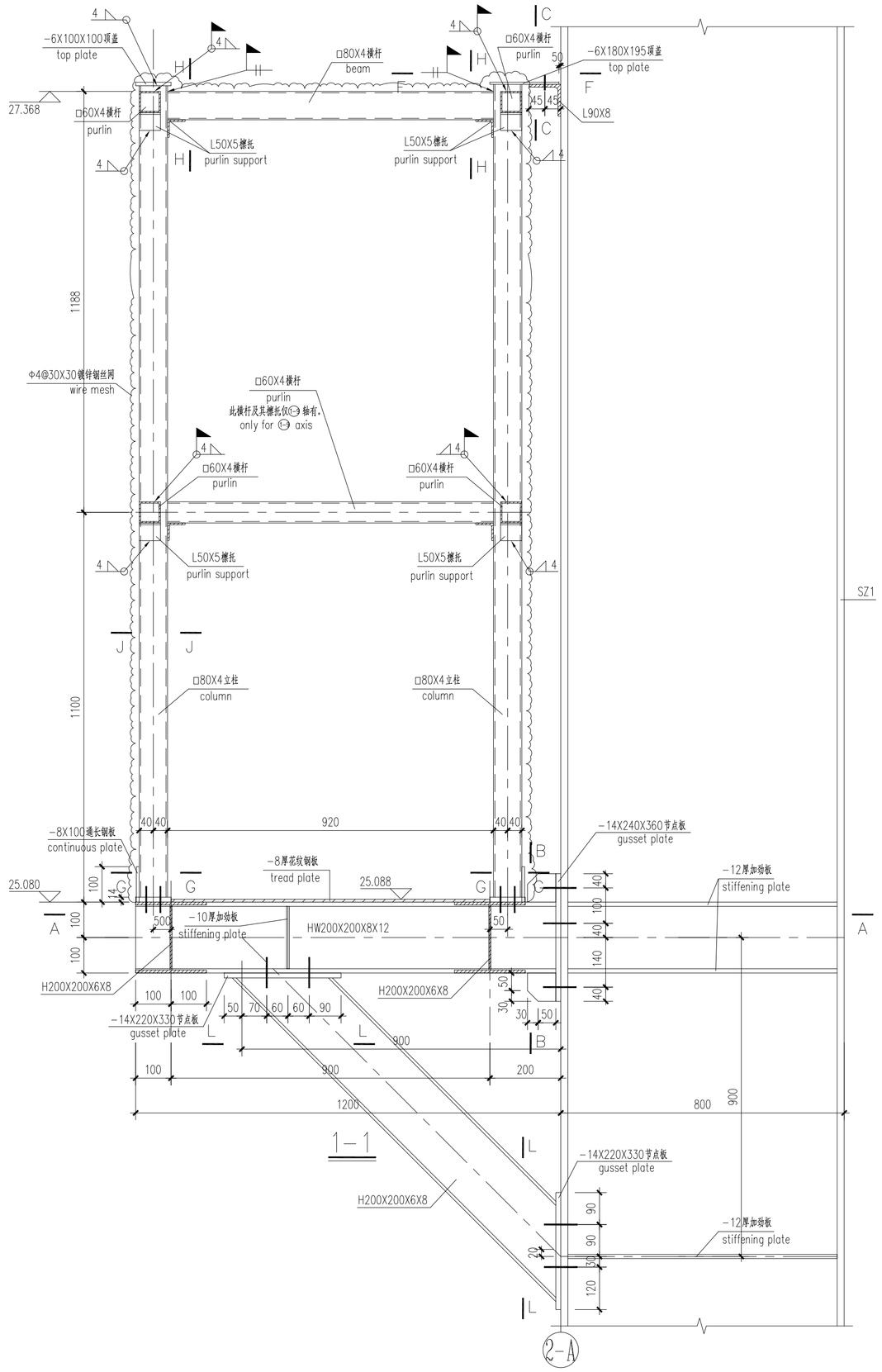

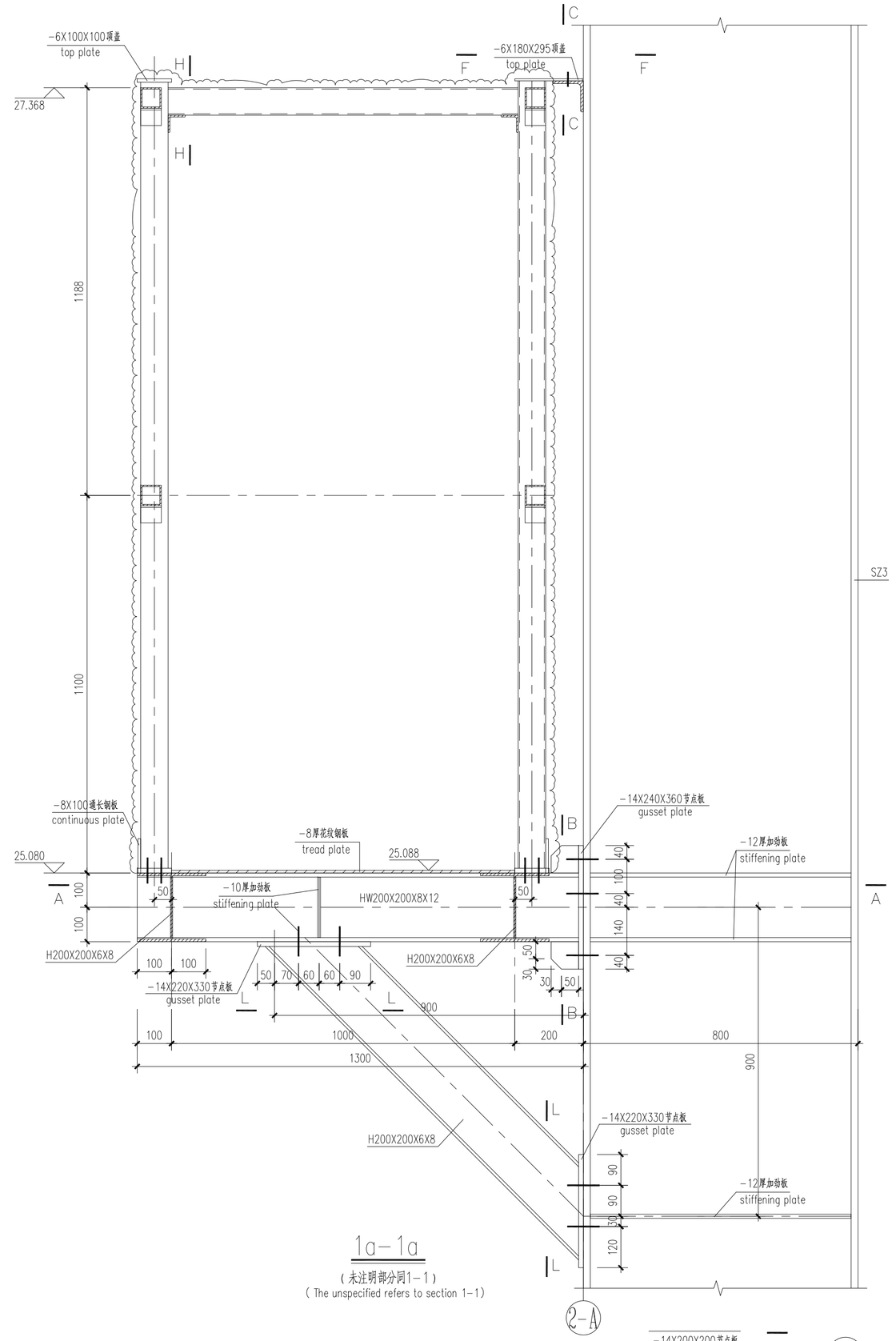

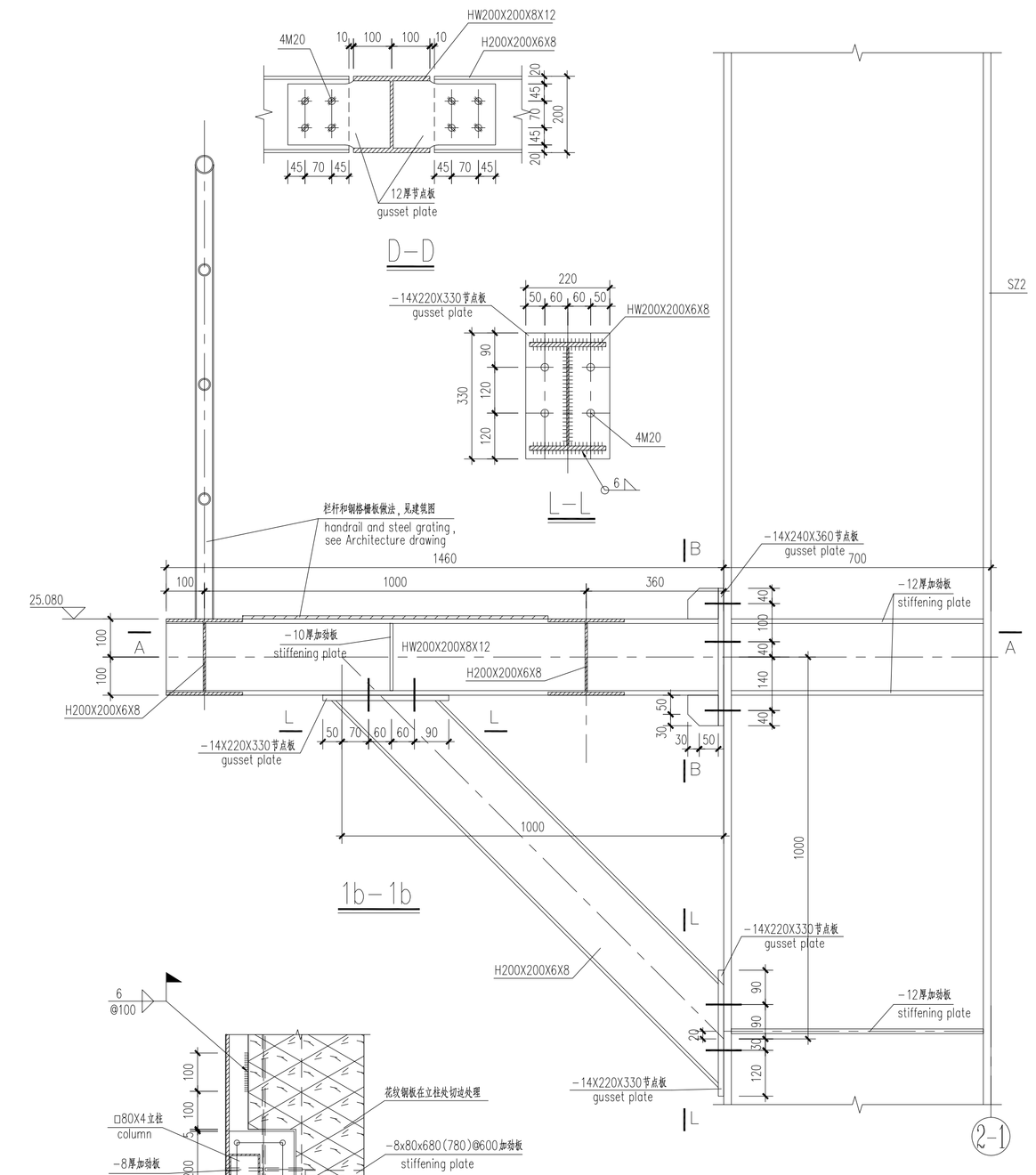

花纹钢板与钢梁连接详图

Notes:

1. 1-1, 1a-1a, 1b-1b section and detail ①, ② position see drawing 001.
2. For other instructions, see the drawing 001 and 003 in this volume.

说明:

1. 1-1, 1a-1a, 1b-1b 剖面位置和①, ②详图位置见001图。
2. 其它说明见001和003图。

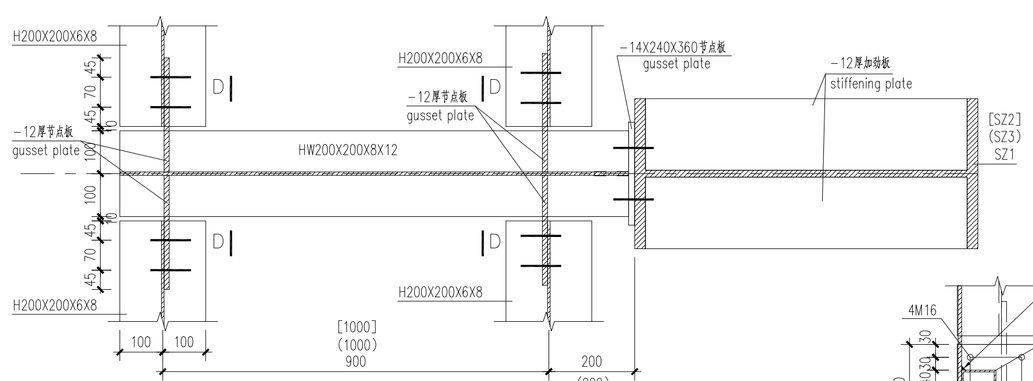

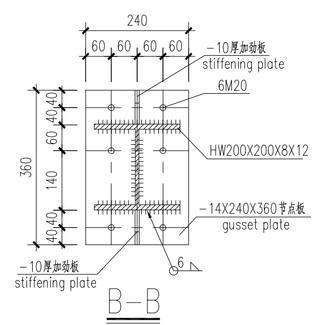

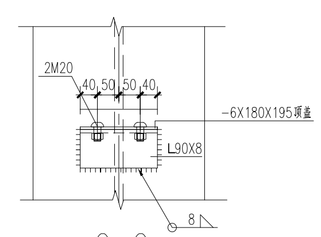

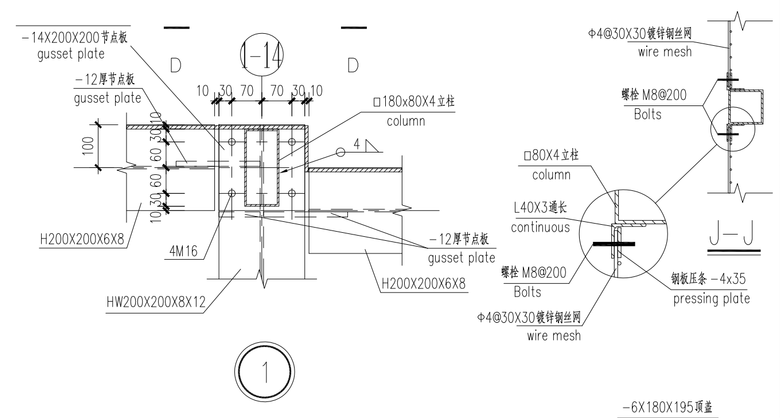

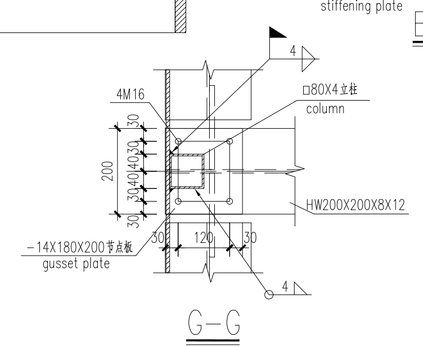

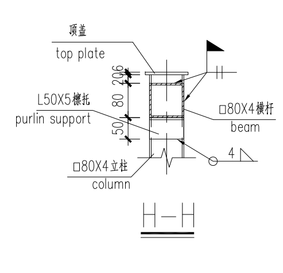

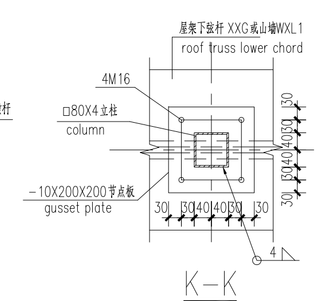

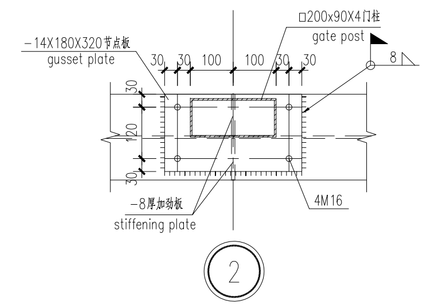

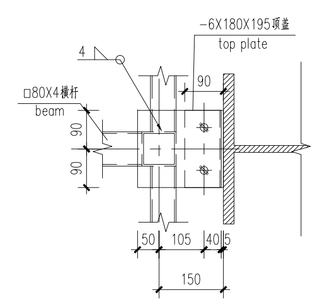

Reference Drawings

Drwg. No.	Title
30-B003701S-T0801-003	±0.000m structure layout for pole 1 valve hall and firewall
30-B003701S-T0801-002	plan layout of pile cap for pole 1 valve hall and firewall
30-B003701S-T0801-001	General specification of foundations for pole 1 valve hall and firewall

Revisions

	Name	Date	Notes
A	王轩		First issue

巴基斯坦默蒂亚里—拉合尔±660kV直流输电工程

±660kV HVDC Project from Matiari to Lahore in Pakistan

NATIONAL TRANSMISSION & DESPATCH COMPANY (NTDC) LIMITED PAKISTAN

CONTRACTOR 国家电网 STATE GRID 中国电力技术装备有限公司 CHINA ELECTRIC POWER EQUIPMENT AND TECHNOLOGY CO.,LTD.

SUBCONTRACTOR East China Electric Power Design Institute Co.,Ltd.

拉合尔±660kV换流站

±660kV Lahore Converter Station

设计阶段 PHASE: 施工图 Detail Design

MLHVDC-LCS-ECI-DD-CS-0809-002A

	姓名 Name	日期 Date
设计 Designed	王轩	18.06.18
校核 Checked	金祝萍	18.06.19
审核 Reviewed	王轩	18.06.19
批准 Approved		18.06.19

极2阀厅侧墙和屋内巡视走道详图(1)

The detail drawing (1) of patrol walkway in Pole 2 valve hall

比例 Scale

图号 DWG NO. 30-B003701S-T0809-002

版本 REV. A

594X841

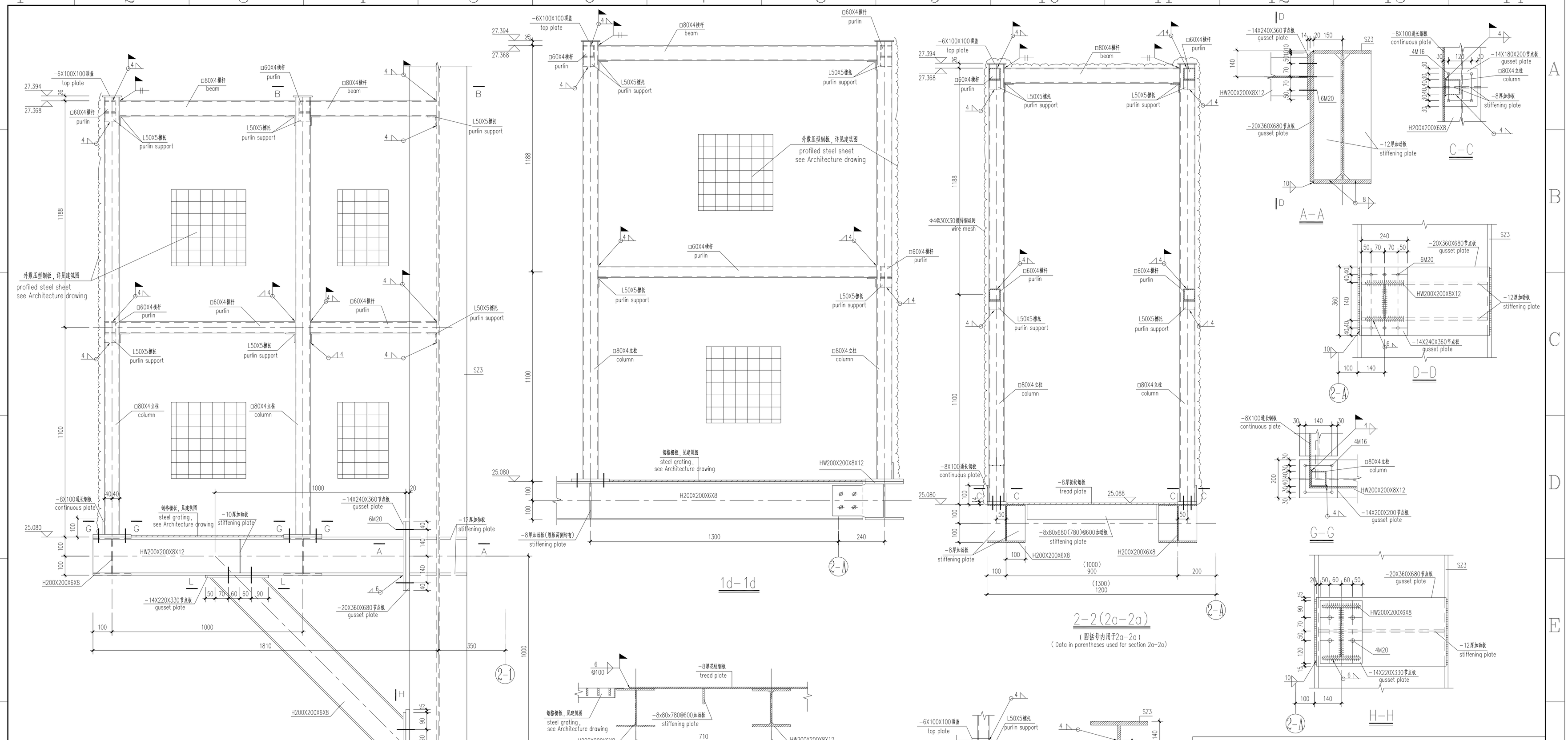

说明：

1. 除特殊注明外，所有未注明的焊缝均满焊，焊脚尺寸hf=6mm.
2. 1c-1c，1d-1d，1e-1e，2-2，2a-2a剖面位置和 ① 详图位置见001图。L-L剖面详图见002图。
3. 阀厅主体钢框架及设备支撑梁加工时，请注意配合此图开孔等。
4. 本册图中除特殊注明外，M16以上螺栓采用10.9级高强螺栓。M16及以下螺栓采用6.8级普通C级螺栓。
5. 其它说明见001图。

Notes:

1. Except where otherwise noted, all unmarked welds are fully welded with hf=6mm.
2. 1c-1c, 1d-1d, 1e,1e, 2-2, 2a-2a section position and detail ① position see drawing 001. The detail of L-L section see drawing 002.
3. When machining the valve body steel frame and equipment support beam, please be careful to match the holes in this drawing.
4. Unless otherwise specified, the bolts whose grade beyond M16 use 10.9 grade high-strength bolts and others use 6.8 grade C class bolts.
5. For other instructions, see the drawing 001 in this volume.

Reference Drawings

Drwg. No.	Title
30-B003701S-T0801-003	±0.000m structure layout for pole 1 valve hall and firewall
30-B003701S-T0801-002	plan layout of pile cap for pole 1 valve hall and firewall
30-B003701S-T0801-001	General specification of foundations for pole 1 valve hall and firewall

Revisions

	Name	Date	Notes
A	王轩		First issue

巴基斯坦默蒂亚里—拉合尔±660kV直流输电工程

±660kV HVDC Project from Matiari to Lahore in Pakistan

NATIONAL TRANSMISSION & DESPATCH COMPANY (NTDC) LIMITED PAKISTAN

CONTRACTOR 国家电网 STATE GRID 中国电力技术装备有限公司 CHINA ELECTRIC EQUIPMENT & ENGINEERING CO.,LTD.

SUBCONTRACTOR East China Electric Power Design Institute Co.,Ltd.

拉合尔±660kV换流站

±660kV Lahore Converter Station

设计阶段 PHASE: 施工图 Detail Design

M L H V D C - L C S - E C I - D D - C S - 0 8 0 9 - 0 0 3 A

	姓名 Name	日期 Date
设计 Designed	王轩	18.06.18
校核 Checked	金洪峰	18.06.19
审核 Reviewed	孙刚林	18.06.19
批准 Approved	杨俊	18.06.19

极1阀厅侧墙和屋内巡视走道详图(2)

The detail drawing (2) of patrol walkway in Pole 1 valve hall

比例 Scale

图号 DWG NO. 30-B003701S-T0809-003

版本 REV. A

594X841

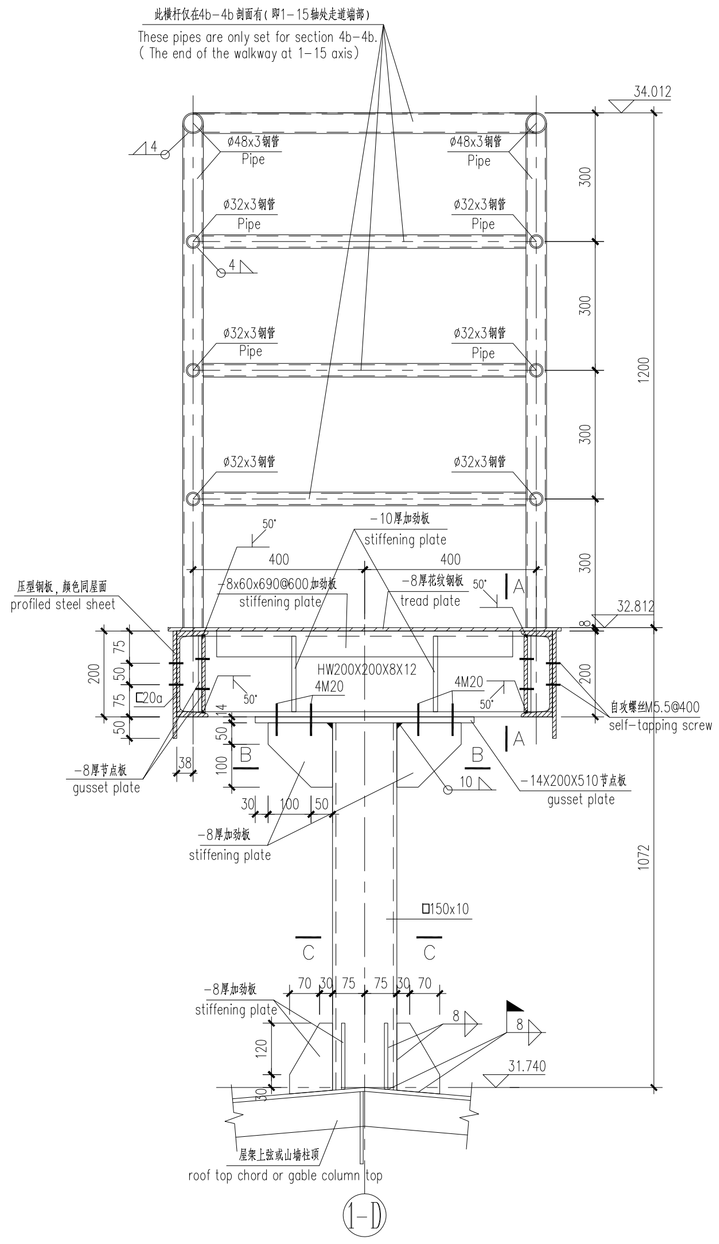

4-4(4b-4b)

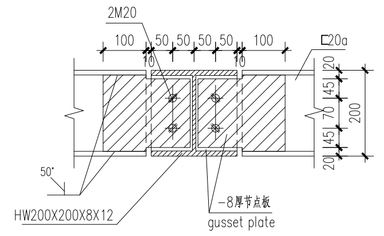

A-A

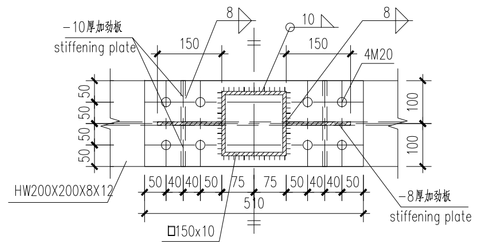

B-B

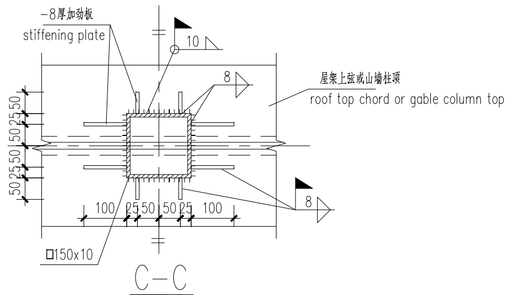

C-C

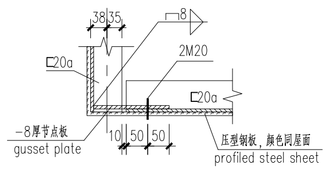

D-D

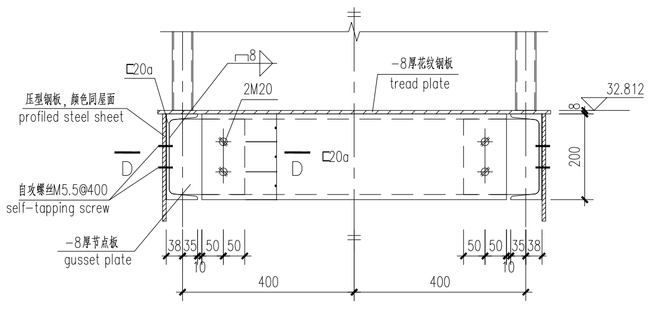

4a-4a

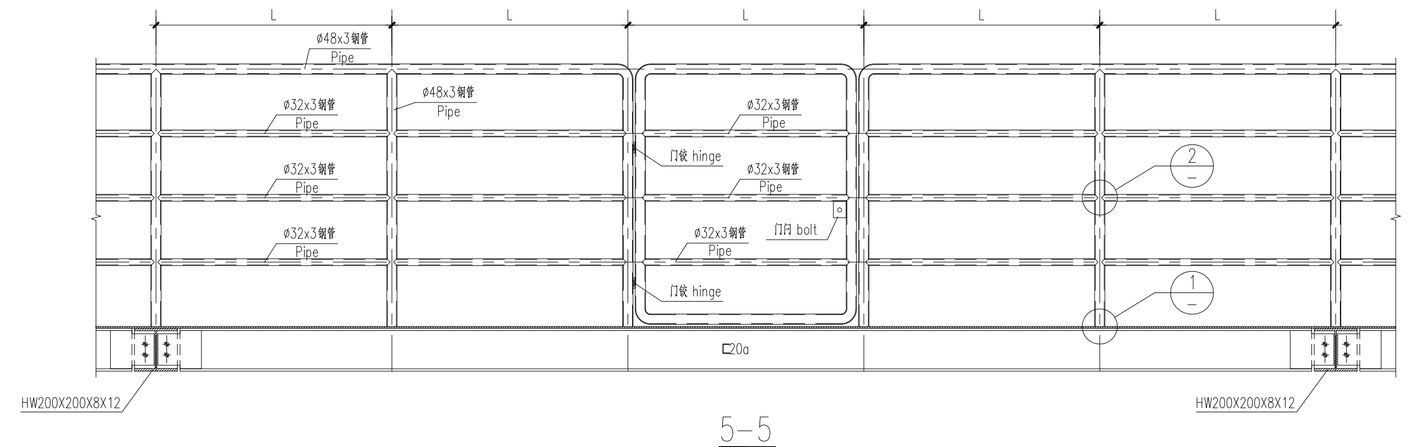

5-5

栏杆典型立面图

Handrail typical elevation

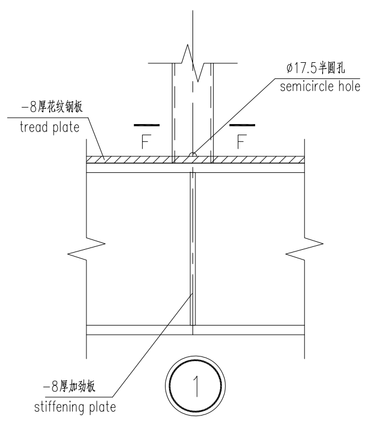

1

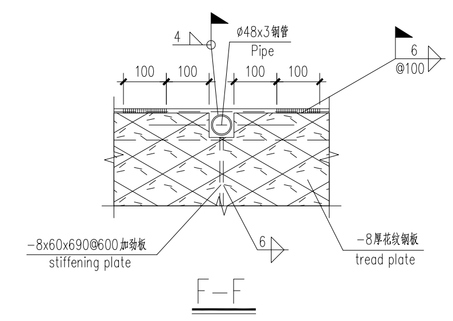

F-F

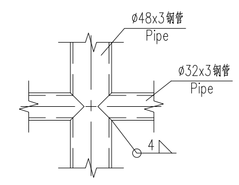

2

说明：

1. 4-4, 4a-4a,5-5剖面位置见001图。
2. 其它说明见001和003图。

Notes:

1. 4-4, 4a-4a, 5-5 section position see drawing 001.
2. For other instructions, see the drawing 001 and 003 in this volume.

Reference Drawings

Drwg. No.	Title
30-B003701S-T0801-003	±0.000m structure layout for pole 1 valve hall and firewall
30-B003701S-T0801-002	plan layout of pile cap for pole 1 valve hall and firewall
30-B003701S-T0801-001	General specification of foundations for pole 1 valve hall and firewall

Revisions

	Name	Date	Notes
A	王轩		First issue

巴基斯坦默蒂亚里-拉合尔±660kV直流输电工程

±660kV HVDC Project from Matiari to Lahore in Pakistan

NATIONAL TRANSMISSION & DESPATCH COMPANY (NTDC) LIMITED PAKISTAN

CONTRACTOR 国家电网 STATE GRID 中国电力技术装备有限公司 CHINA ELECTRIC POWER EQUIPMENT AND TECHNOLOGY CO.,LTD.

SUBCONTRACTOR East China Electric Power Design Institute Co.,Ltd.

拉合尔±660kV换流站

±660kV Lahore Converter Station

设计阶段 PHASE: 施工图 Detail Design

M L H V D C - L C S - E C I - D D - C S - 0 8 0 9 - 0 0 4 A

	姓名 Name	日期 Date
设计 Designed	王轩	18.06.18
校核 Checked	金晓峰	18.06.19
审核 Reviewed	孙刚	18.06.19
批准 Approved	刘[illegible]	18.06.19
比例 Scale		

极1阀厅屋面巡视走道详图

The detail drawing of patrol walkway on the roof of Pole 1 valve hall

图号 DWG NO. 30-B003701S-T0809-004

版本 REV. A

594X841